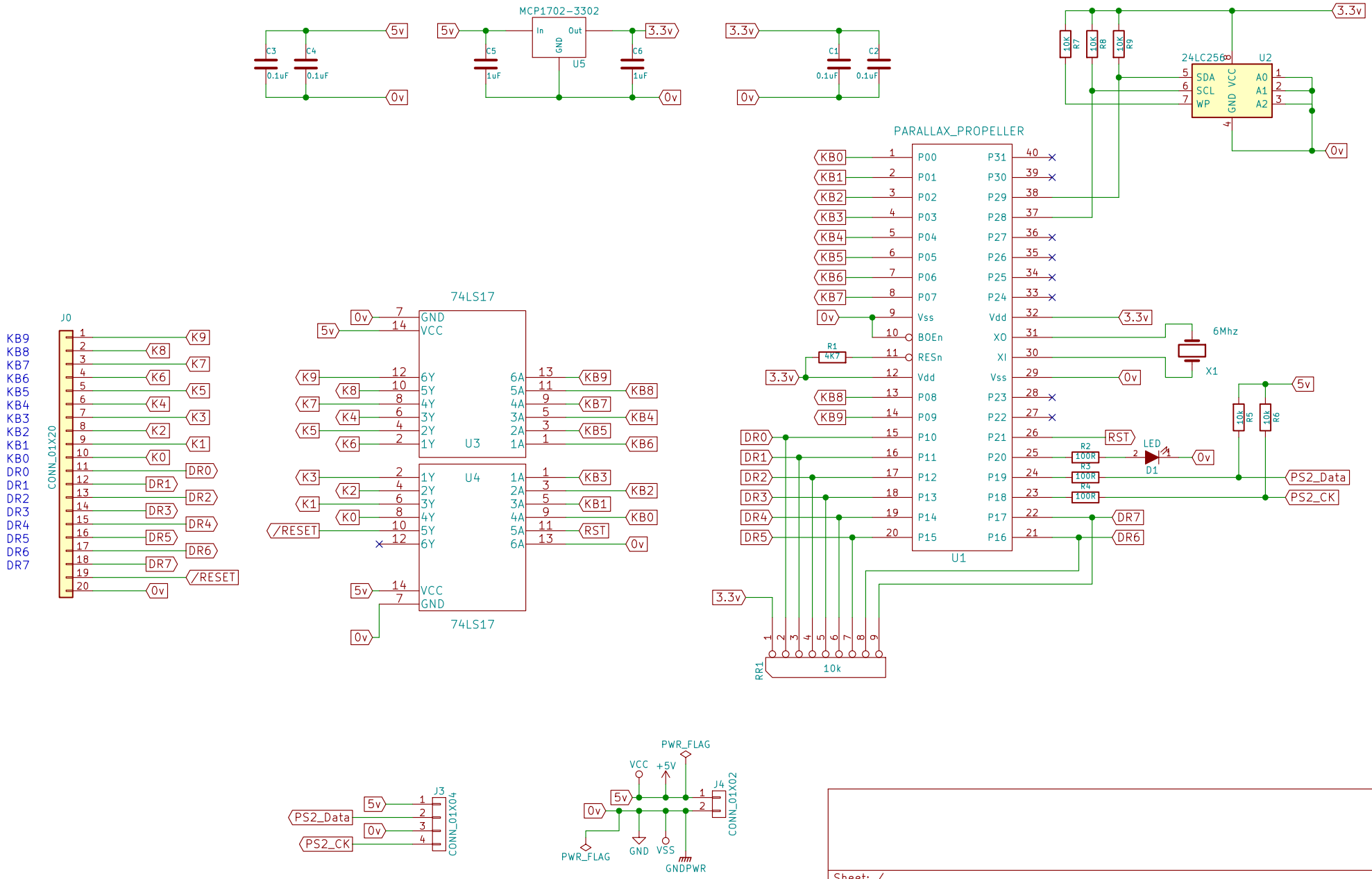

Sheet: /
File: Keyboard.sch

Title: Memotech MTX PS/2 Keyboard Interface

Size: A4	Date: 2018-01-25	Rev: 1
KiCad E.D.A. eeschema 4.0.7		Id: 1/1