MTX Rom Board

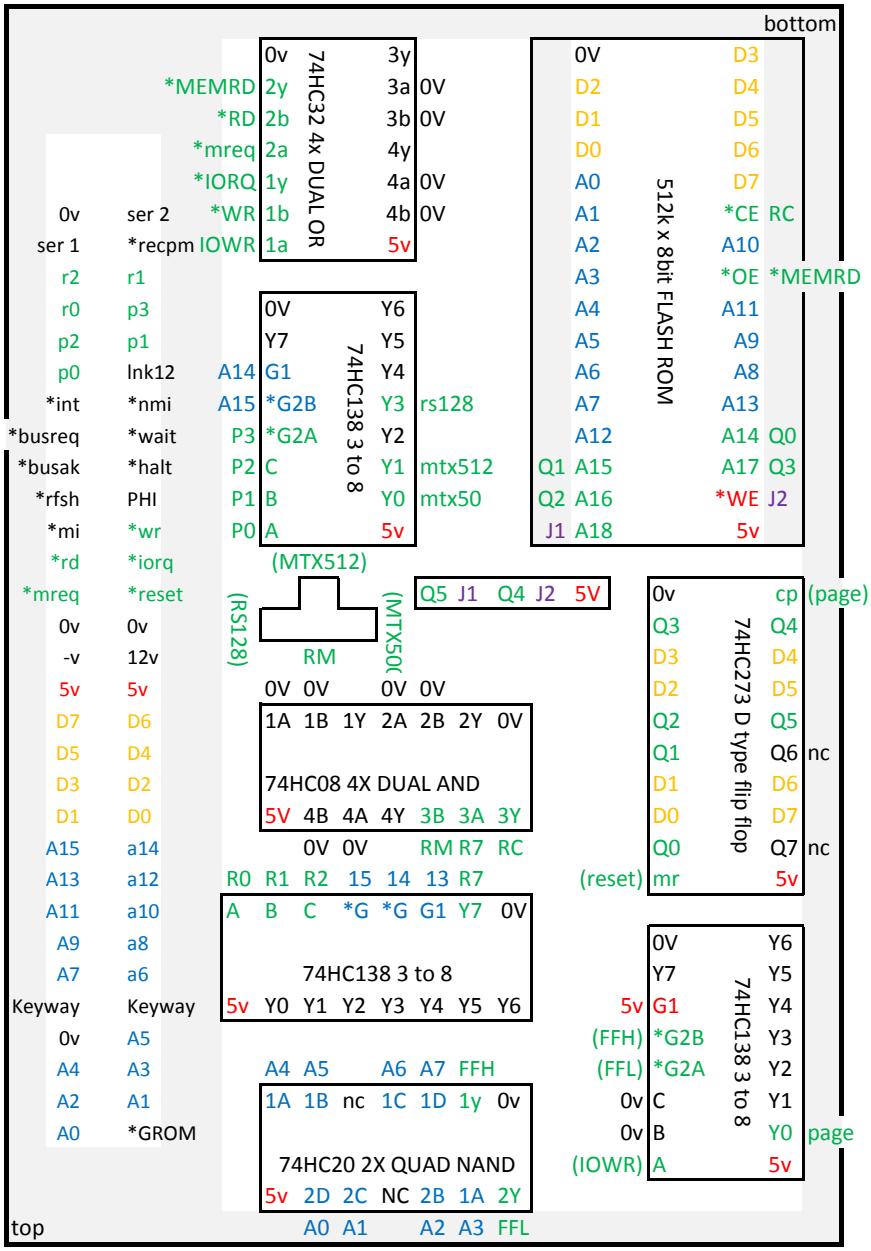

ROM does 2 jobs

Paged in as ROM 7 it's the controlling foftware
Paged in bank 1 of the half ram page, it's the game data store

Paging for rom 7 - R15=0 R14=0 R13=1 R0=1 R1=1 R2=1
Paging for Bank1 R15=0 R14=1 P2=0 P3=0 P0/P1=0,1 or 3 for MTX500/MTX512/RS128
Ouput port selected when IOWR low(via OR) and A0-A7 all high(via nand)

LS138 inputs 2 low one high CS, and 3 selectors